COMPACT F220L DR G E

FREEZER

PRODUCT SERIES: COMPACT 220
ITEM NUMBER: 163220010
COUNTRY OF ORIGIN: INDIA



Hoshizaki COMPACT F220L DR G E is a freezer with a net usable volume of 77 ltr. ranking in energy efficiency class A. It has a cabinet height of 833 mm incl. levelling feet and a depth of 645 mm.

- Ventilated refrigeration system
- Air circulation system
- Automatic fan cut-out when door is opened
- Automatic defrost
- Electronic controller with temperature indicator
- Right hand hinged door
- Reversible door
- Door lock
- 2 white shelves
- Under the cabinet 2 leveling feet towards the front, 2 built-in wheels towards the back

ACCESSORIES INCLUDED

1 white shelf (483.8x 433 mm) and 1 bottom shelf

OPTIONAL EXTRAS

Shelf, white
Bottom shelf, white
Stacking kit Compact 220

WARRANTY PERIOD	EXTERIOR
5 Years on Parts & Labour - based on country agreement	**White Finish**

INTERIOR
White

Refrigerant type: R600a / Refrigerant: 0,034 kg / CO2 equivalent: 0,102 kg

Energy consumption	Energy efficiency class	Energy efficiency class standard	Energy Efficiency Index (EEI)
700 kWh/year	A	ISO 22041: 2019	24,73 EEI

CERTIFICATIONS

Hoshizaki Europe B.V.
Burgemeester Stramanweg 101
1101 AA Amsterdam
The Netherlands

HEBV Amsterdam office T. +31 (0)20 691 8499
Export line direct T. +31 (0)20 565 0429
sales.ex@hoshizaki-europe.com
service.ex@hoshizaki-europe.com
www.hoshizaki-europe.com

COMPACT F220L DR G E

TECHNICAL SPECIFICATIONS

Temperature range	Shelf size	Volume, gross	Net usable volume	Power supply	Connection load	Climate class	Sound level	Ref. capacity (at -25°C)
-25/-5°C	Shelf 483.8 x 433 mm	123 l	77 l	230V, 50Hz	150 W	4 (max. ambient temp. of 30 °C with 55% RH)	39,2 dB(A)	186 W

SHIPPING SPECIFICATIONS

Width (packed)	Depth (packed)	Height (packed)	Volume (packed)	Gross weight	Width	Depth	Height	Net weight
614 mm	720 mm	997 mm	0,441 m3	53 kg	595 mm	645 mm	833 mm	44 kg

Disclaimer: Every effort has been made to ensure that the information contained in this spec sheet is accurate at the time of publishing. Hoshizaki Europe BV assumes no responsibility or liability for typographical errors or omissions or for any misinterpretation of the information within the publication and reserves the right to change without notice.

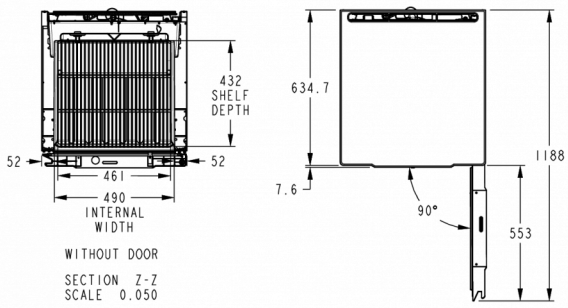

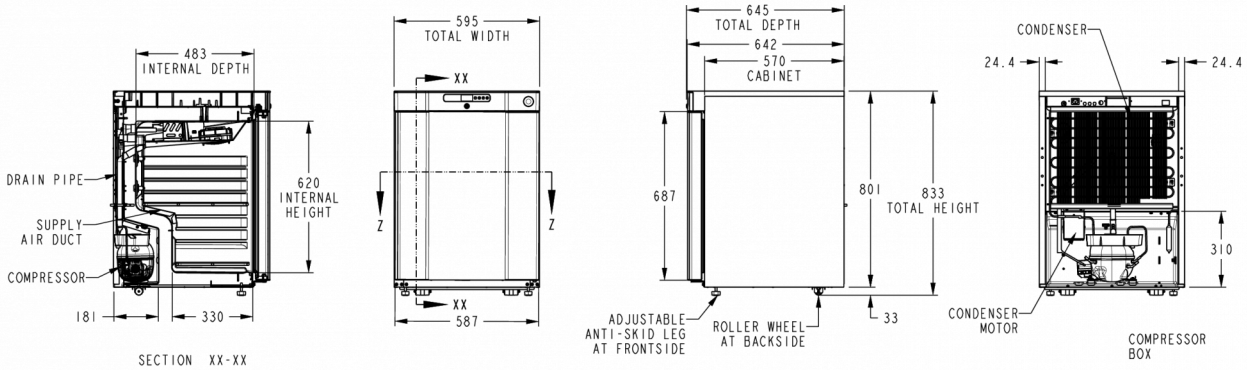

HOSHIZAKI

Hoshizaki Belgium	info@hoshizaki.nl
Hoshizaki Danmark	info@hoshizaki.dk
Hoshizaki Deutschland	vertrieb@hoshizaki.de
Hoshizaki France	info@hoshizaki.fr
Hoshizaki Iberia	info@hoshizaki.es
Hoshizaki Italia	commerciale@hoshizaki.it
Hoshizaki Middle East	sales.ex@hoshizaki-europe.com
Hoshizaki Netherlands	info@hoshizaki.nl
Hoshizaki Norge	salg@hoshizaki.no
Hoshizaki Sverige	order@hoshizaki.se
Hoshizaki UK	uksales@hoshizaki.uk
Export countries	sales.ex@hoshizaki-europe.com
Other countries	sales.ex@hoshizaki-europe.com

www.hoshizaki-europe.com