JFM-570P

Tiger thermal heating

ITEM NUMBER: JFM-570P
COUNTRY OF ORIGIN: JAPAN
BRAND: TIGER



The TIGER JFM-570P is a thermal food holder with a capacity of 5.7 ltr. and that keeps rice warm up to 6 hrs.

- Unique stackable design for efficient storage handling.
- Excellent thermal Insulation. High performance insulating materials in holder structure (rigid urethane foam) and styrene foam used in lid.
- Absorbent Dew Collector. Excess moisture is absorbed in dew collector installed on the inner surface of lid, preventing the rice inside from becoming sticky.

ACCESSORIES INCLUDED

N/A

WARRANTY PERIOD
2 Years on Parts & Labour - based on country agreement

EXTERIOR
Stainless Steel

INTERIOR
Stainless steel

CERTIFICATIONS

ISO HOSHIZAKI • ISO 9001

Hoshizaki Europe B.V.
Burgemeester Stramanweg 101
1101 AA Amsterdam
The Netherlands

HEBV Amsterdam office T. +31 (0)20 691 8499
Export line direct T. +31 (0)20 565 0429
sales.ex@hoshizaki-europe.com
service.ex@hoshizaki-europe.com
www.hoshizaki-europe.com

JFM-570P

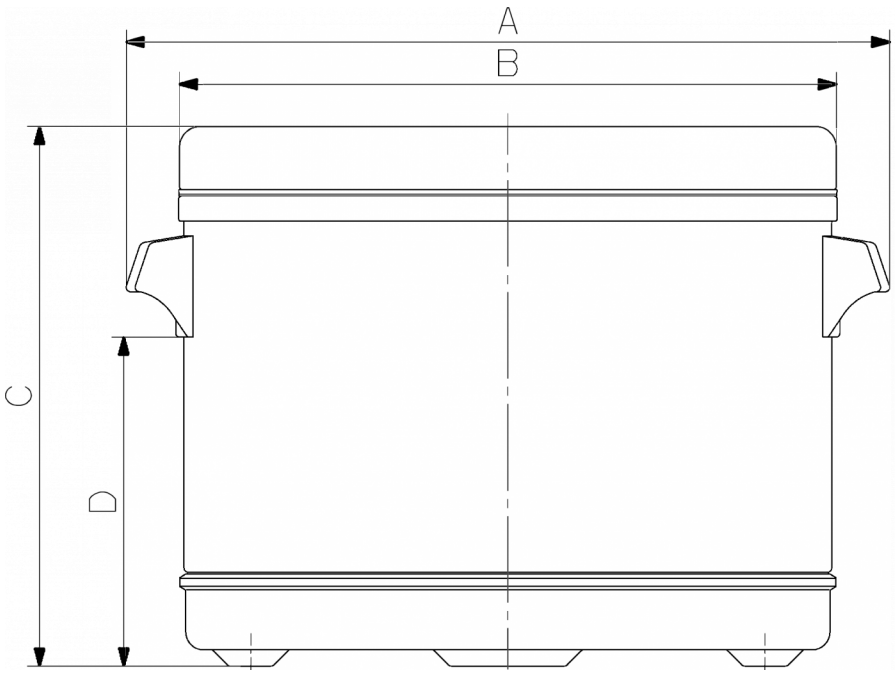

	A	B	C	D
JFM-390P	430	360	250	137
JFM-570P	430	360	310	194

TECHNICAL SPECIFICATIONS

Cooking and warming capacity	Temperature retention (6h)
5,7 l	78 °C

SHIPPING SPECIFICATIONS

Width (packed)	Depth (packed)	Height (packed)	Volume (packed)	Gross weight	Width	Depth	Height	Net weight
382 mm	379 mm	334 mm	0,048 m3	5,4 kg	430 mm	360 mm	310 mm	4,8 kg

Disclaimer: Every effort has been made to ensure that the information contained in this spec sheet is accurate at the time of publishing. Hoshizaki Europe BV assumes no responsibility or liability for typographical errors or omissions or for any misinterpretation of the information within the publication and reserves the right to change without notice.

HOSHIZAKI

Hoshizaki Belgium info@hoshizaki.nl
Hoshizaki Danmark info@hoshizaki.dk
Hoshizaki Deutschland vertrieb@hoshizaki.de
Hoshizaki France info@hoshizaki.fr
Hoshizaki Iberia info@hoshizaki.es
Hoshizaki Italia commerciale@hoshizaki.it
Hoshizaki Middle East sales.ex@hoshizaki-europe.com

Hoshizaki Netherlands info@hoshizaki.nl
Hoshizaki Norge salg@hoshizaki.no
Hoshizaki Sverige order@hoshizaki.se
Hoshizaki UK uksales@hoshizaki.uk
Export countries sales.ex@hoshizaki-europe.com
Other countries sales.ex@hoshizaki-europe.com

www.hoshizaki-europe.com