# IM-45CPE-25

## Cuber, Self Contained

**Production Capacity (kg/24h) - AT 10°C, WT 10°C: 42**
**Storage bin capacity: 15 kg**

PRODUCT SERIES: CUBE ICEMAKERS
ITEM NUMBER: M112-D001
COUNTRY OF ORIGIN: UK



Hoshizaki IM-45CPE-25 Cube model is a self-contained ice maker producing up to 42 kg of cube ice per 24 hours.

Ice cube dimensions and weight - disclaimer: The drawing is for illustration purposes only. Cube size and weight may be differ due to local installation conditions.

- Ice making system with an automatic rinse cycle
- Each ice cycle is made with fresh water
- Closed Cell System helps produce compact, hard and geometrically perfect ice
- Closed water circuit for contamination protection
- Easy external access to control panel
- UV-C sanitization function is retrofittable
- Internal drain pump is retrofittable
- System comes with a magnetic DC water pump with variable speed that has no direct coupling, which prevents any leakage
- Cleanable air filter
- Removable door gasket
- Easily removable water pan assembly

**ICE TYPE: Small cubes - 25**



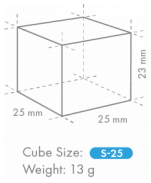


**WARRANTY PERIOD**
**3 Years on Parts & Labour - based on country agreement**

**EXTERIOR**
**Stainless steel AISI 441, Galvanized steel (Rear)**

Refrigerant type: R290 / Refrigerant: 0,07 kg / CO2 equivalent: 0,21 kg

**OPERATING CONDITIONS**
Ambient temperature (minimum): 1 °C, Ambient temperature (maximum): 40 °C, Water supply pressure (minimum): 0.07MPa (0.7bar), Water supply pressure (maximum): 0.8MPa (8bar), Water supply temperature (minimum): 5 °C, Water supply temperature (maximum): 35 °C, Voltage range (Rated Voltage): ±6%

## ACCESSORIES INCLUDED

Installation kit, Legs, Scoop

## OPTIONAL EXTRAS

4HC-H water filtration, UV-C sanitization kit, internal drain pump (Pump motor kit and bracket)

## CORRESPONDING WATER FILTERS

4HC-H Single Water Filter, 4HC Replacement Cartridge

CERTIFICATIONS

Hoshizaki Europe B.V.
Burgemeester Stramanweg 101
1101 AA Amsterdam
The Netherlands

HEBV Amsterdam office T. +31 (0)20 691 8499
Export line direct T. +31 (0)20 565 0429
sales.ex@hoshizaki-europe.com
service.ex@hoshizaki-europe.com
www.hoshizaki-europe.com

# IM-45CPE-25

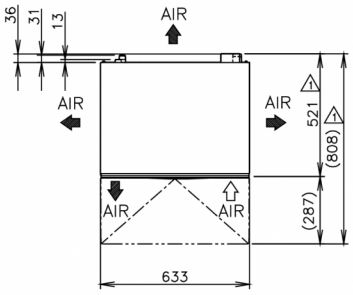


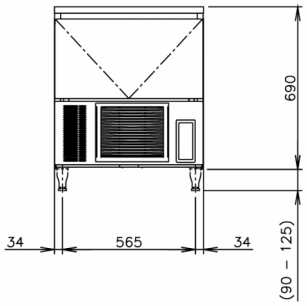


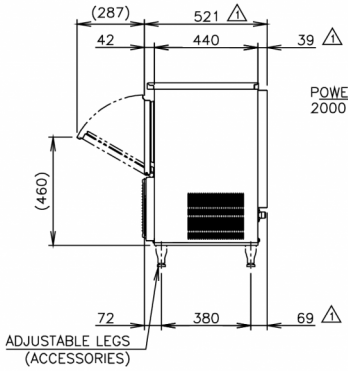


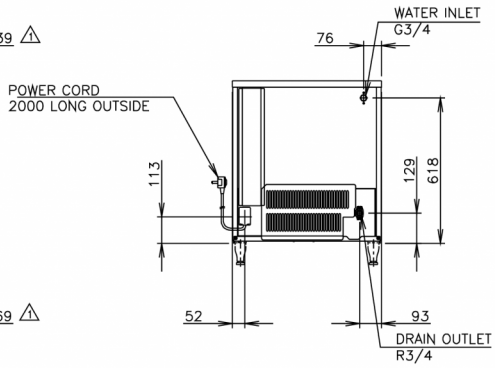


## TECHNICAL SPECIFICATIONS

| Cooling system | Power supply | Electric Consumption | Electrical circuit breaker protection | Heat Rejection (AT 32°C, WT 21°C) | Production Capacity (kg/24h) - AT 10°C, WT 10°C | Production Capacity (kg/24h) - AT 21°C, WT 15°C | Production Capacity (kg/24h) - AT 32°C, WT 21°C | Water consumption (m3/24h) - AT 10°C, WT 10°C |
|---|---|---|---|---|---|---|---|---|
| Air Cooled | 220-240V/1N/50Hz | 0,245 kW | 5 A | 0,71 kW | 42 | 37 | 27 | 0,2 |

## SHIPPING SPECIFICATIONS

| Width (packed) | Depth (packed) | Height (packed) | Volume (packed) | Gross weight | Width | Depth | Height | Dimensions legs | Net weight |
|---|---|---|---|---|---|---|---|---|---|
| 735 mm | 570 mm | 864 mm | 0,362 m3 | 54 kg | 633 mm | 521 mm | 690 mm | for legs add 90-125 mm | 44 kg |

Disclaimer: Every effort has been made to ensure that the information contained in this spec sheet is accurate at the time of publishing. Hoshizaki Europe BV assumes no responsibility or liability for typographical errors or omissions or for any misinterpretation of the information within the publication and reserves the right to change without notice.

HOSHIZAKI

Hoshizaki Belgium info@hoshizaki.nl
Hoshizaki Danmark info@hoshizaki.dk
Hoshizaki Deutschland vertrieb@hoshizaki.de
Hoshizaki France info@hoshizaki.fr
Hoshizaki Iberia info@hoshizaki.es
Hoshizaki Italia commerciale@hoshizaki.it
Hoshizaki Middle East sales.ex@hoshizaki-europe.com

Hoshizaki Netherlands info@hoshizaki.nl
Hoshizaki Norge salg@hoshizaki.no
Hoshizaki Sverige order@hoshizaki.se
Hoshizaki UK uksales@hoshizaki.uk
Export countries sales.ex@hoshizaki-europe.com
Other countries sales.ex@hoshizaki-europe.com

www.hoshizaki-europe.com