IM-130PE-E-23

Cuber, Self Contained

Production Capacity (kg/24h) - AT 10°C, WT 10°C: 110
Storage bin capacity: 50 kg

PRODUCT SERIES: CUBE ICEMAKERS
ITEM NUMBER: M115-D301
COUNTRY OF ORIGIN: UK



Hoshizaki IM-130PE-E-23 EliteCube model is a self-contained ice maker with internal drain pump and UV-C sanitization function producing up to 110 kg of cube ice per 24 hours.

Ice cube dimensions and weight - disclaimer: The drawing is for illustration purposes only. Cube size and weight may be differ due to local installation conditions.

- Ice making system with an automatic rinse cycle
- Each ice cycle is made with fresh water
- Closed Cell System helps produce compact, hard and geometrically perfect ice
- Closed water circuit for contamination protection
- Easy external access to control panel
- UV sanitization function sanitizing air and water (UV-C irradiation)
- Internal drain pump
- System comes with a magnetic DC water pump with variable speed that has no direct coupling, which prevents any leakage
- Cleanable air filter
- Removable door gasket
- Easily removable water pan assembly

ICE TYPE: Medium cubes - 23





WARRANTY PERIOD
3 Years on Parts & Labour - based on country agreement

EXTERIOR
Stainless steel AISI 441, Galvanized steel (Rear)

Refrigerant type: R290 / Refrigerant: 0,14 kg / CO2 equivalent: 0,42 kg

OPERATING CONDITIONS
Ambient temperature (minimum): 1 °C, Ambient temperature (maximum): 40 °C, Water supply pressure (minimum): 0.07MPa (0.7bar), Water supply pressure (maximum): 0.8MPa (8bar), Water supply temperature (minimum): 5 °C, Water supply temperature (maximum): 35 °C, Voltage range (Rated Voltage): ±6%

ACCESSORIES INCLUDED
Installation kit, Legs, Scoop

OPTIONAL EXTRAS
4HC-H water filtration

CORRESPONDING WATER FILTERS
4HC-H Single Water Filter, 4HC Replacement Cartridge

CERTIFICATIONS

Hoshizaki Europe B.V.
Burgemeester Stramanweg 101
1101 AA Amsterdam
The Netherlands

HEBV Amsterdam office T. +31 (0)20 691 8499
Export line direct T. +31 (0)20 565 0429
sales.ex@hoshizaki-europe.com
service.ex@hoshizaki-europe.com
www.hoshizaki-europe.com

IM-130PE-E-23

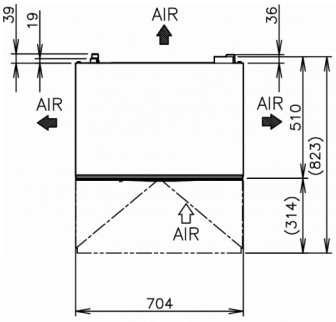

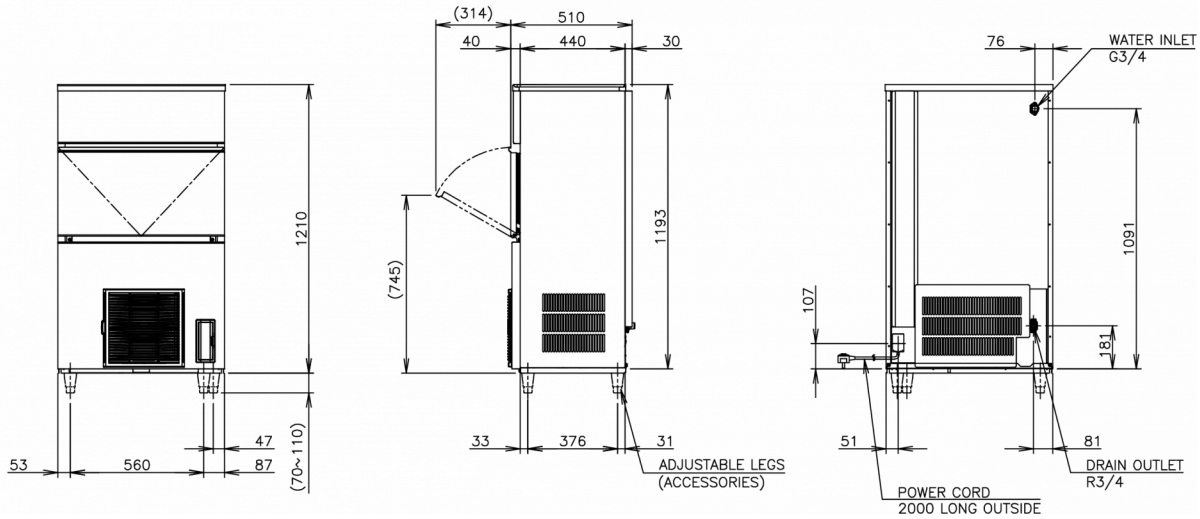

TECHNICAL SPECIFICATIONS

Cooling system	Power supply	Electric Consumption	Electrical circuit breaker protection	Heat Rejection (AT 32°C, WT 21°C)	Production Capacity (kg/24h) - AT 10°C, WT 10°C	Production Capacity (kg/24h) - AT 21°C, WT 15°C	Production Capacity (kg/24h) - AT 32°C, WT 21°C	Water consumption (m3/24h) - AT 10°C, WT 10°C
Air Cooled	220-240V/1N/50Hz	0,595 kW	5 A	1,45 kW	110	100	95	0,57

SHIPPING SPECIFICATIONS

Width (packed)	Depth (packed)	Height (packed)	Volume (packed)	Gross weight	Width	Depth	Height	Dimensions legs	Net weight
805 mm	580 mm	1.375 mm	0,642 m3	84 kg	704 mm	506 mm	1.210 mm	for legs add 70-110mm	72 kg

Disclaimer: Every effort has been made to ensure that the information contained in this spec sheet is accurate at the time of publishing. Hoshizaki Europe BV assumes no responsibility or liability for typographical errors or omissions or for any misinterpretation of the information within the publication and reserves the right to change without notice.

Please observe: This type of icemaker is on special order only. Please take longer lead times into consideration.

HOSHIZAKI

Hoshizaki Belgium info@hoshizaki.nl
Hoshizaki Danmark info@hoshizaki.dk
Hoshizaki Deutschland vertrieb@hoshizaki.de
Hoshizaki France info@hoshizaki.fr
Hoshizaki Iberia info@hoshizaki.es
Hoshizaki Italia commerciale@hoshizaki.it
Hoshizaki Middle East sales.ex@hoshizaki-europe.com

Hoshizaki Netherlands info@hoshizaki.nl
Hoshizaki Norge salg@hoshizaki.no
Hoshizaki Sverige order@hoshizaki.se
Hoshizaki UK uksales@hoshizaki.uk
Export countries sales.ex@hoshizaki-europe.com
Other countries sales.ex@hoshizaki-europe.com

www.hoshizaki-europe.com