FM-300AKE-HCN-SB

Nugget Ice Maker, Modular

Production Capacity (kg/24h) - AT 10°C, WT 10°C: 250

PRODUCT SERIES: FLAKE & NUGGET ICEMAKERS
ITEM NUMBER: F088-C107
COUNTRY OF ORIGIN: UK



Hoshizaki FM-300AKE-HCN is a modular ice maker producing up to 250 kg of nugget ice per 24 hours. This model is compatible with our storage bins.

- FM models can be converted to either flake or nugget ice only by a qualified engineer
- CleanCycle6 system for rinse of built up impurities (minerals) every 6 hours
- Water consumption is equal to the ice production
- Ice making system with an automatic rinse cycle
- Closed water circuit for contamination protection
- Electronic controller
- Operation time-based parts replacement system for preventive maintenance
- Auger is made of double hardened stainless steel
- Carbon graphite bushings allows the machine to work without grease
- Cleanable air filter

ICE TYPE: Nugget





WARRANTY PERIOD	EXTERIOR
2 Years on Parts & Labour	**Stainless steel AISI 441, Galvanized steel (Rear)**

Refrigerant type: R290 / Refrigerant: 0.09 kg / CO2 equivalent: 0.27 kg

OPERATING CONDITIONS

Ambient temperature (minimum): 5 °C, Ambient temperature (maximum): 40 °C, Water supply pressure (minimum): 0.05MPa (0.5bar), Water supply pressure (maximum): 0.8MPa (8bar), Water supply temperature (minimum): 5 °C, Water supply temperature (maximum): 35 °C, Voltage range (Rated Voltage): ±6%

ACCESSORIES INCLUDED

Installation kit

OPTIONAL EXTRAS

4HC-H water filtration

CORRESPONDING WATER FILTERS

4HC-H Twin Water Filter, 4HC Replacement Cartridge

CORRESPONDING BIN(S)

B-140SB, B-210SB, B-340SB

CORRESPONDING TOP KITS

TK-30 for B-140SB, B-210SB, B340SB (optional, not required), TK-8D for B-210SB, TK-8D + TK18D for B-340SB

CERTIFICATIONS

Hoshizaki Europe B.V.
Burgemeester Stramanweg 101
1101 AA Amsterdam
The Netherlands

T. +31 (0)20 691 8499
sales.ex@hoshizaki-europe.com
www.hoshizaki-europe.com

FM-300AKE-HCN-SB

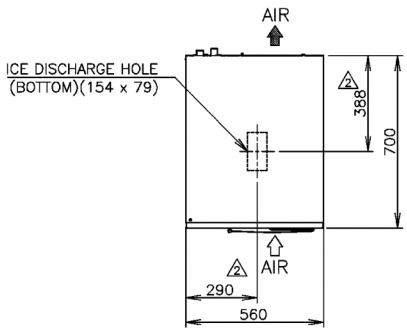

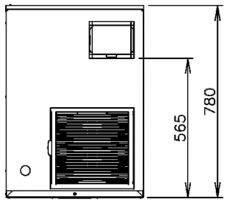

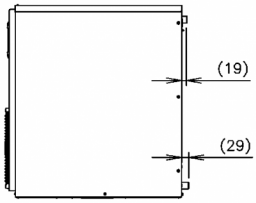

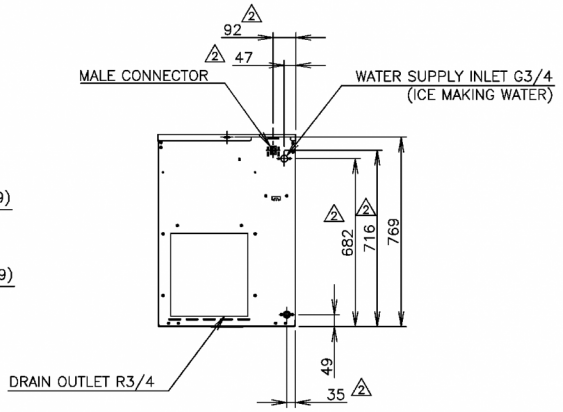

TECHNICAL SPECIFICATIONS

Cooling system	Power supply	Electric Consumption	Heat Rejection (AT 32°C, WT 21°C)	Production Capacity (kg/24h) - AT 10°C, WT 10°C	Production Capacity (kg/24h) - AT 21°C, WT 15°C	Production Capacity (kg/24h) - AT 32°C, WT 21°C	Water consumption (m3/24h) - AT 10°C, WT 10°C
Air Cooled	220-240V/1N/50Hz	0.96 kW	1.84 kW	250	210	175	0.25

SHIPPING SPECIFICATIONS

Width (packed)	Depth (packed)	Height (packed)	Volume (packed)	Gross weight	Width	Depth	Height	Net weight
665 mm	820 mm	950 mm	0.518 m3	88 kg	560 mm	700 mm	780 mm	81 kg

Disclaimer: Every effort has been made to ensure that the information contained in this spec sheet is accurate at the time of publishing. Hoshizaki Europe BV assumes no responsibility or liability for typographical errors or omissions or for any misinterpretation of the information within the publication and reserves the right to change without notice.