HOSHIZAKI

Premier KL 2 A 3D 3D C U

2-Section Refrigerated Counter

PRODUCT SERIES: PREMIER 270
ITEM NUMBER: 221000044210
COUNTRY OF ORIGIN: TURKEY

Hoshizaki Premier KL 2 A 3D 3D C U is a 2-section 1/1 GN refrigerated counter with 2 drawer sections each with 3 x 1/3 drawers with lock and a flat worktop. It has a net usable volume of 155 ltr. Castors H = 150mm.

- Fan assisted cooling
- Completely front vented
- Unit can be fully integrated. Due to front venting design, no air flow is required to the underneath, sides or back of unit
- Automatic defrost with re-evaporation of defrost water
- Heavy duty cabinet and compressor compartment construction
- Climate class 5 cooling system enduring up to +40°C ambient temperature
- Exterior and interior of stainless steel AISI 304
- A compact slide out refrigeration unit for maintenance and service
- Removable condenser filter for cleaning or replacement
- Compartmentalized cooling unit that is available as one unit
- Drawers with lock
- Drawers with pull-out stop
- 3 x 1/3 drawer sets compatible with 150mm deep GN pans
- The cooling performance allows for drawer section next to compressor compartment
- Removable magnetic drawer gaskets with triple insulation area
- Pan-shaped inside base with rounded corners to catch fluids
- IP 2X water protection
- Matching design identity as the Premier cabinets

1/1 GN

ACCESSORIES INCLUDED

N/A

OPTIONAL EXTRAS

Set of legs 125-200mm
Set of legs 130-180mm
Set of castors 125mm
Set of castors 150mm
Set of castors 200mm
Mini Castors - 2 braked and 2 unbraked 88mm
Castor Extension Kit (extends height of castors by 50mm)
Door section
Drawer section with 2 x 1/2 drawers
Drawer section with 3 x 1/3 drawers
Soft-close drawer Conversion Kit (for retrofit)
Flat worktop
Flat worktop with 50mm splashback
Flat worktop with 100mm splashback

Energy consumption	Energy efficiency class	Energy efficiency class standard	Energy Efficiency Index (EEI)
390 kWh/year	A	ISO 22041: 2019	17.85 EEI

WARRANTY PERIOD
6 Years on Parts & Labour

EXTERIOR
Stainless steel AISI 304

INTERIOR
Stainless steel AISI 304

Refrigerant type: R600a / Refrigerant: 0.07 kg / CO2 equivalent: 0.21 kg

CERTIFICATIONS

ISO HOSHIZAKI • ISO 9001
ISO HOSHIZAKI • ISO 14001
CE

Sunday, 25 October 2026, 08:03

Hoshizaki UK
2 The Technology Centre
London Road
Swanley, Kent BR8 7AG
United Kingdom

T. 01322 616 900
uksales@hoshizaki.uk
www.hoshizaki.uk

Premier KL 2 A 3D 3D C U

TECHNICAL SPECIFICATIONS

Temperature range	Shelf size	Volume, gross	Net usable volume	Climate class	Sound level
+2/+12°C	1/1 GN	301 l	155 l	5 (max. ambient 40°C w/ 40% RH)	43 dB(A)

Power supply	Connection load	Ref. capacity (at -10°C)
230V, 50Hz	115 W	206 W

SHIPPING SPECIFICATIONS

Width (packed)	Depth (packed)	Height (packed)	Volume (packed)	Gross weight	Width	Depth	Height	Net weight
1,340 mm	730 mm	1,103 mm	1.079 m3	132 kg	1,314 mm	700 mm	904.2 mm	120 kg

Disclaimer: Every effort has been made to ensure that the information contained in this spec sheet is accurate at the time of publishing. Hoshizaki Europe BV assumes no responsibility or liability for typographical errors or omissions or for any misinterpretation of the information within the publication and reserves the right to change without notice.

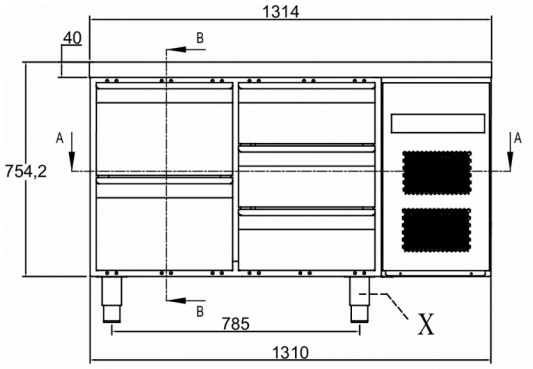

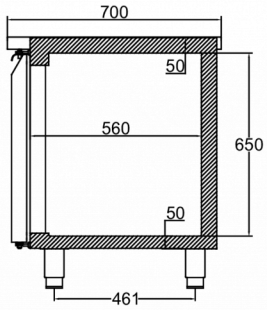

SECTION B-B

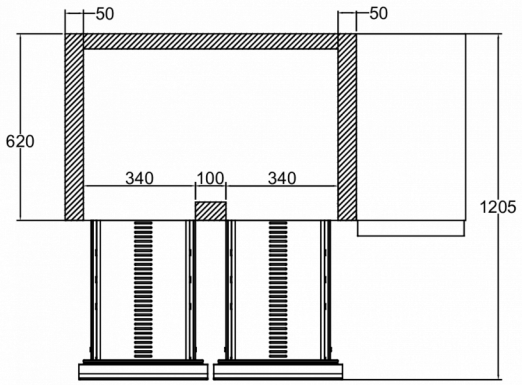

SECTION A-A

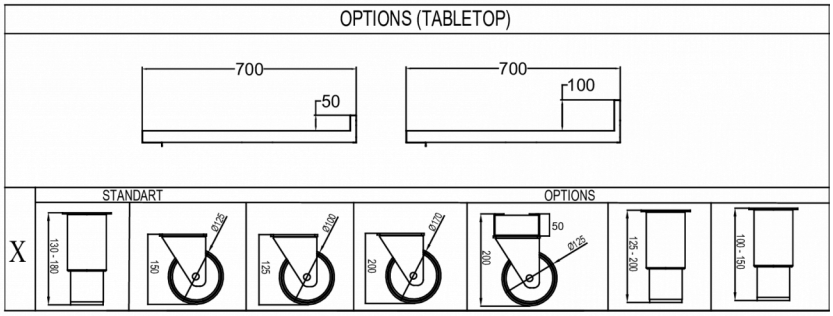

HOSHIZAKI

Hoshizaki Belgium info@hoshizaki.nl
Hoshizaki Danmark info@hoshizaki.dk
Hoshizaki Deutschland vertrieb@hoshizaki.de
Hoshizaki France info@hoshizaki.fr
Hoshizaki Iberia info@hoshizaki.es
Hoshizaki Italia commerciale@hoshizaki.it
Hoshizaki Middle East sales.ex@hoshizaki-europe.com

Hoshizaki Netherlands info@hoshizaki.nl
Hoshizaki Norge salg@hoshizaki.no
Hoshizaki Sverige order@hoshizaki.se
Hoshizaki UK uksales@hoshizaki.uk
Export countries sales.ex@hoshizaki-europe.com
Other countries sales.ex@hoshizaki-europe.com

www.hoshizaki.uk

HOSHIZAKI

Premier KL 2 A 3D 3D C U

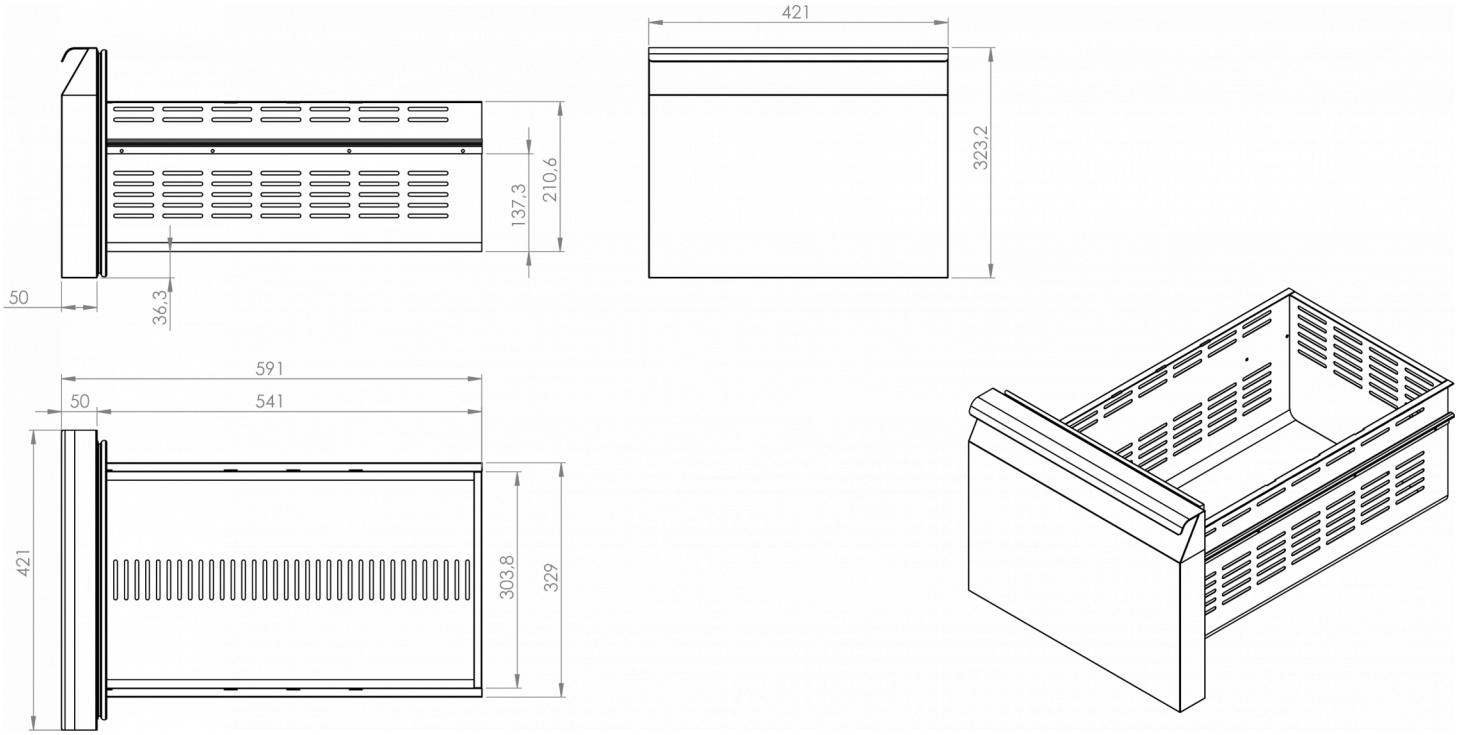

HOSHIZAKI

Hoshizaki Belgium	info@hoshizaki.nl
Hoshizaki Danmark	info@hoshizaki.dk
Hoshizaki Deutschland	vertrieb@hoshizaki.de
Hoshizaki France	info@hoshizaki.fr
Hoshizaki Iberia	info@hoshizaki.es
Hoshizaki Italia	commerciale@hoshizaki.it
Hoshizaki Middle East	sales.ex@hoshizaki-europe.com

Hoshizaki Netherlands	info@hoshizaki.nl
Hoshizaki Norge	salg@hoshizaki.no
Hoshizaki Sverige	order@hoshizaki.se
Hoshizaki UK	uksales@hoshizaki.uk
Export countries	sales.ex@hoshizaki-europe.com
Other countries	sales.ex@hoshizaki-europe.com

www.hoshizaki.uk