HOSHIZAKI

Premier K 3 PT DL DL DR C U

3-Section Refrigerated Counter with Prep top worktop

1/1 GN

PRODUCT SERIES: PREMIER 370
ITEM NUMBER: 311070112210
COUNTRY OF ORIGIN: TURKEY

Hoshizaki Premier K 3 PT DL DL DR L U is a 3-section 1/1 GN refrigerated counter with three doors and a prep top worktop with an insulated hinged lid (with handle). It has a gross volume of 463 ltr. Castors H = 150mm and shelf width is 325mm.

- 9 x 1/3 Gastronorm containers 100mm deep can be fitted into the worktop (GN containers not supplied)
- Max depth GN-containers 150mm
- With insulated hinged lid (with handle)
- Fan assisted cooling
- Completely front vented
- Unit can be fully integrated. Due to front venting design, no air flow is required to the underneath, sides or back of unit
- Automatic defrost with re-evaporation of defrost water
- Heavy duty cabinet and compressor compartment construction
- Climate class 5 cooling system enduring up to +40°C ambient temperature
- Exterior and interior of stainless steel AISI 304
- A compact slide out refrigeration unit for maintenance and service
- Removable condenser filter for cleaning or replacement
- Compartmentalized cooling unit that is available as one unit
- Reversible doors
- Anti-tilt shelves
- Removable magnetic door gaskets with triple insulation area
- Pan-shaped inside base with rounded corners to catch fluids
- IP 21 water protection
- Matching design identity as the Premier cabinets

ACCESSORIES INCLUDED

2 grey shelves per door section

OPTIONAL EXTRAS

Set of legs 100-150mm
Set of legs 125-200mm
Set of legs 130-180mm
Set of castors 125mm
Set of castors 150mm
Mini Castors - 2 braked and 2 unbraked 88mm
Stainless shelf, 325 x 530mm
Grey shelf, 325 x 530mm
2 x shelf supports
Door section

WARRANTY PERIOD
6 Years on Parts & Labour

EXTERIOR
Stainless steel AISI 304

INTERIOR
Stainless steel AISI 304

Refrigerant type: R290 / Refrigerant: 0.09 kg / CO2 equivalent: 0.27 kg

CERTIFICATIONS

ISO HOSHIZAKI • ISO 9001
ISO HOSHIZAKI • ISO 14001
CE

Friday, 23 October 2026, 11:06

Hoshizaki UK
2 The Technology Centre
London Road
Swanley, Kent BR8 7AG
United Kingdom

T. 01322 616 900
uksales@hoshizaki.uk
www.hoshizaki.uk

Premier K 3 PT DL DL DR C U

TECHNICAL SPECIFICATIONS

Temperature range	Shelf size	Volume, gross	Climate class
+2/+12°C	1/1 GN	463 l	5 (max. ambient 40°C w/ 40% RH)

Power supply	Connection load	Ref. capacity (at -10°C)
230V, 50Hz	280 W	633 W

SHIPPING SPECIFICATIONS

Width (packed)	Depth (packed)	Height (packed)	Volume (packed)	Gross weight	Width	Depth	Height	Net weight
1,783 mm	830 mm	1,397 mm	2.05 m3	192 kg	1,755 mm	800 mm	1,210 mm	180 kg

Disclaimer: Every effort has been made to ensure that the information contained in this spec sheet is accurate at the time of publishing. Hoshizaki Europe BV assumes no responsibility or liability for typographical errors or omissions or for any misinterpretation of the information within the publication and reserves the right to change without notice.

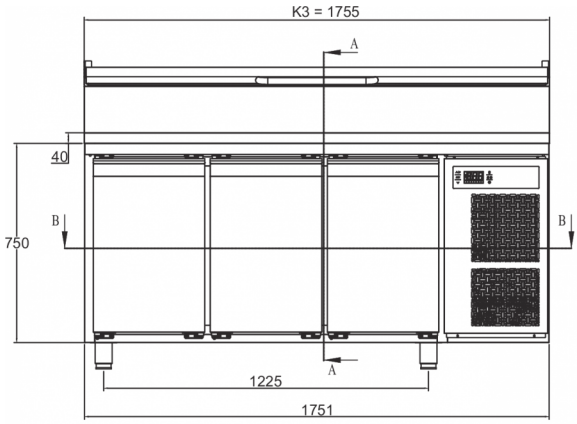

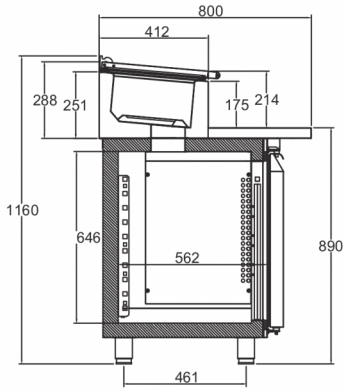

SECTION A-A

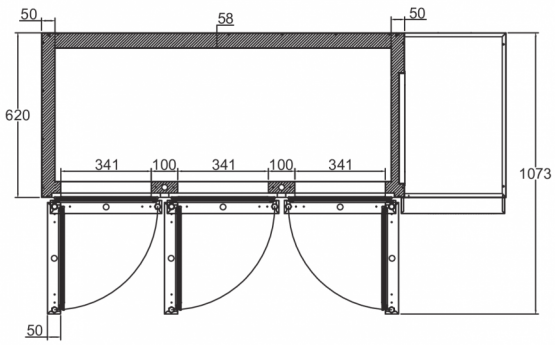

SECTION B-B

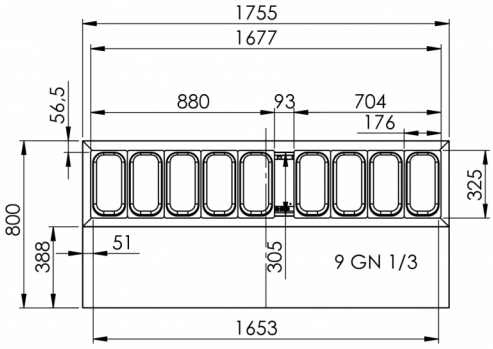

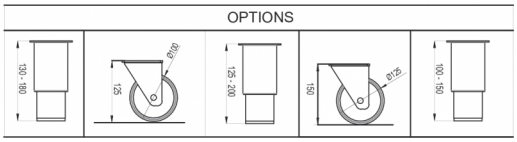

Hoshizaki Belgium info@hoshizaki.nl
Hoshizaki Danmark info@hoshizaki.dk
Hoshizaki Deutschland vertrieb@hoshizaki.de
Hoshizaki France info@hoshizaki.fr
Hoshizaki Iberia info@hoshizaki.es
Hoshizaki Italia commerciale@hoshizaki.it
Hoshizaki Middle East sales.ex@hoshizaki-europe.com

Hoshizaki Netherlands info@hoshizaki.nl
Hoshizaki Norge salg@hoshizaki.no
Hoshizaki Sverige order@hoshizaki.se
Hoshizaki UK uksales@hoshizaki.uk
Export countries sales.ex@hoshizaki-europe.com
Other countries sales.ex@hoshizaki-europe.com

www.hoshizaki.uk