IM-240DPE

Cuber, Modular & Stackable

Production Capacity (kg/24h) - AT 10°C, WT 10°C: 210

PRODUCT SERIES: CUBE ICEMAKERS
ITEM NUMBER: M120
COUNTRY OF ORIGIN: UK

Hoshizaki IM-240DPE Cube model is a modular and stackable ice maker producing up to 210kg of cube ice per 24 hours. This model is compatible with Hoshizaki storage bins.

Ice cube dimensions and weight - disclaimer: The drawing is for illustration purposes only. Cube size and weight may differ due to local installation conditions.

- Ice making system with an automatic rinse cycle.
- Each ice cycle is made with fresh water.
- Closed water circuit for contamination protection.
- Closed Cell System helps produce compact, hard and geometrically perfect ice.
- Easy external access to control panel.
- System comes with a magnetic DC water pump with variable speed and that has no direct coupling, which prevents any leakage.
- UV-C sanitization function is retrofittable.
- Cleanable air filter.
- Stainless steel frame inside.
- Easily removable water pan assembly.
- A maximum of 3 units are stackable: 1 x DPE + 2 x XPE.

ICE TYPE: Large cubes, Standard

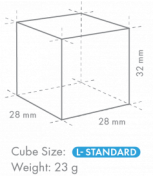

WARRANTY PERIOD	EXTERIOR
3 Years on Parts & Labour	**Stainless steel AISI 441, Galvanized steel (Rear)**

Refrigerant type: R290 / Refrigerant: 0.147 kg / CO2 equivalent: 0.441 kg

OPERATING CONDITIONS

Ambient temperature (minimum): 1 °C, Ambient temperature (maximum): 40 °C, Water supply pressure (minimum): 0.07MPa (0.7bar), Water supply pressure (maximum): 0.8MPa (8bar), Water supply temperature (minimum): 5 °C, Water supply temperature (maximum): 35 °C, Voltage range (Rated Voltage): ±6%

ACCESSORIES INCLUDED

brace, Installation kit, Scoop

OPTIONAL EXTRAS

4HC-H water filtration, UV-C sanitization kit, compatibility kit for stacking combinations including new and previous N series ice makers.

CORRESPONDING WATER FILTERS

4HC-H Twin Water Filter, 4HC Replacement Cartridge

CORRESPONDING BIN(S)

B-340SB

CORRESPONDING TOP KITS

TK-48 for B-340SB (optional, not required), TK-IMD2 for B-340SB

CERTIFICATIONS

Hoshizaki UK
2 The Technology Centre
London Road
Swanley, Kent BR8 7AG
United Kingdom

T. 01322 616 900
uksales@hoshizaki.uk
www.hoshizaki.uk

IM-240DPE

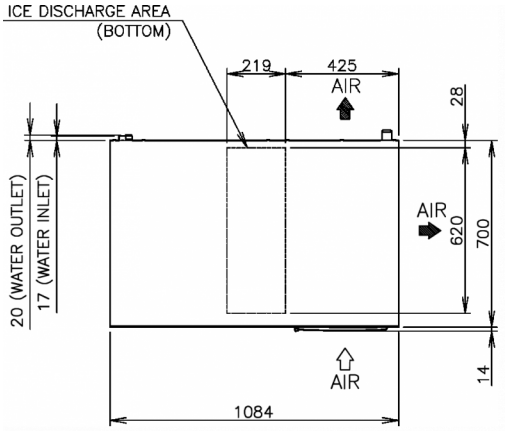

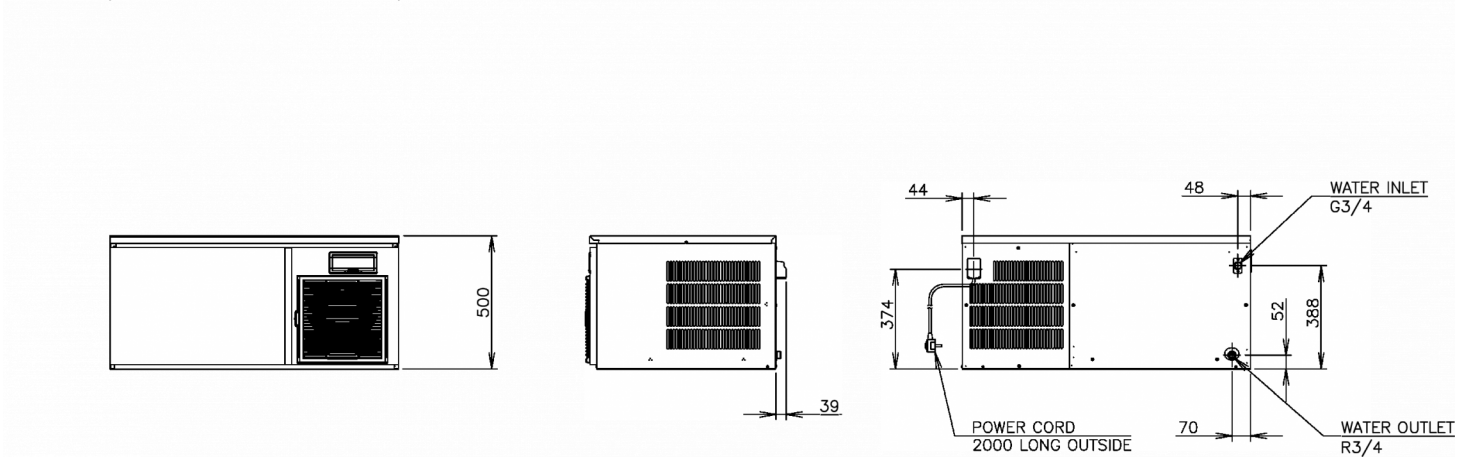

TECHNICAL SPECIFICATIONS

Cooling system	Power supply	Electric Consumption	Electrical circuit breaker protection	Heat Rejection (AT 32°C, WT 21°C)	Production Capacity (kg/24h) - AT 10°C, WT 10°C	Production Capacity (kg/24h) - AT 21°C, WT 15°C	Production Capacity (kg/24h) - AT 32°C, WT 21°C	Water consumption (m3/24h) - AT 10°C, WT 10°C
Air Cooled	1/220 - 240V/50Hz	0.845 kW	5 A	2.25 kW	210	195	175	0.67

SHIPPING SPECIFICATIONS

Width (packed)	Depth (packed)	Height (packed)	Volume (packed)	Gross weight	Width	Depth	Height	Net weight
1,196 mm	825 mm	640 mm	0.632 m3	96 kg	1,084 mm	700 mm	500 mm	82 kg

Disclaimer: Every effort has been made to ensure that the information contained in this spec sheet is accurate at the time of publishing. Hoshizaki Europe BV assumes no responsibility or liability for typographical errors or omissions or for any misinterpretation of the information within the publication and reserves the right to change without notice.

Hoshizaki Belgium info@hoshizaki.nl
Hoshizaki Danmark info@hoshizaki.dk
Hoshizaki Deutschland vertrieb@hoshizaki.de
Hoshizaki France info@hoshizaki.fr
Hoshizaki Iberia info@hoshizaki.es
Hoshizaki Italia commerciale@hoshizaki.it
Hoshizaki Middle East sales.ex@hoshizaki-europe.com
Hoshizaki Netherlands info@hoshizaki.nl
Hoshizaki Norge salg@hoshizaki.no
Hoshizaki Sverige order@hoshizaki.se
Hoshizaki UK uksales@hoshizaki.uk
Export countries sales.ex@hoshizaki-europe.com
Other countries sales.ex@hoshizaki-europe.com
www.hoshizaki.uk