Premier U 60 DR U Ru1

Refrigerator/Freezer 'U' type with RU1 valve for remote cooling system

1/1 EN

GAMMA DE PRODUCTOS: PREMIER 60
NÚMERO DE ARTÍCULO: 188601031

Hoshizaki Premier U 60 DR U Ru1 is suitable for the Euronorm 1/1 system (400 x 600mm) and with RU1 valve for connection to a remote cooling system. It is ready to install and is compatible with multiple refrigerants. This heavy duty cabinet has a gross volume of 480 ltr. and the height of the cabinet with adjustable legs is 2080-2130mm. Adjustable legs are 130-180mm. The depth is 848mm without pedal door opener (920mm incl. pedal door opener).

Ultimate flexibility with 'U' type cabinet:
The cabinet can be set to run as a refrigerator or as a freezer. Set the controller to run as either K, M or F cabinet with the following temperature ranges:

K: +2/+12°C M: -5/+12°C F: -25/-5°C.

- Ready-to-install cabinet with RU1 valve
- Air circulation system
- Automatic fan cut-out when door is opened
- Automatic electric defrost with re-evaporation of defrost water
- Heavy duty cabinet
- Tested to Climate Class 5
- Exterior and interior of stainless steel AISI 304
- Stainless steel wall rails and adjustable shelf supports
- LED lighting on the top panel
- Right hand hinged reversible door
- Automatic door closing
- Door lock
- Removable magnetic door gaskets
- Pedal door opener with overload protection (included as accessory)
- Pan-shaped inside base with rounded corners to catch fluids
- Low sound level
- IP21 water protection
- Matching design identity as the Premier counters

ACCESORIOS INCLUIDOS

4 estantes grises (400 x 600 mm), Apertura de puerta con pedal y protección contra sobrecarga

PERÍODO DE GARANTÍA
6 años en piezas y mano de obra

EXTERIOR
Acero inoxidable AISI 304

INTERIOR
Acero inoxidable AISI 304

Compatibilidad de refrigerante: R448A, R449A, R455A

CERTIFICACIONES

ISO HOSHIZAKI • ISO 9001
ISO HOSHIZAKI • ISO 14001
CE

domingo, 21 diciembre 2025, 08:57

Hoshizaki Iberia
Travessera de Gràcia, 73-79 4t 6ª
08006 Barcelona
España

T. +34 (0)93 626 03 17
info@hoshizaki.es
www.hoshizaki.es

Premier U 60 DR U Ru1

ESPECIFICACIONES TÉCNICAS

Tamaño del estante	Volumen bruto	Fuente de alimentación	Min. cooling capacity K and M cabinets at -10°C	Temperature Range Span	Clase climática
Repisa Euronorm 400x600 mm | EN 1/1	480 l	230V, 50Hz	300 W	-25/+12°C	5

ESPECIFICACIONES DE ENVÍO

Ancho (en caja)	Profundo (en caja)	Altura (en caja)	Volumen (en caja)	Peso bruto	Ancho	Profundo	Altura incluyendo piernas (mínimo)	Altura incluyendo patas (máximo)	Peso neto
670 mm	975 mm	2.150 mm	1,404 m3	100 kg	610 mm	848 mm	2.080 mm	2.130 mm	90 kg

Descargo de responsabilidad: Every effort has been made to ensure that the information contained in this spec sheet is accurate at the time of publishing. Hoshizaki Europe BV assumes no responsibility or liability for typographical errors or omissions or for any misinterpretation of the information within the publication and reserves the right to change without notice.

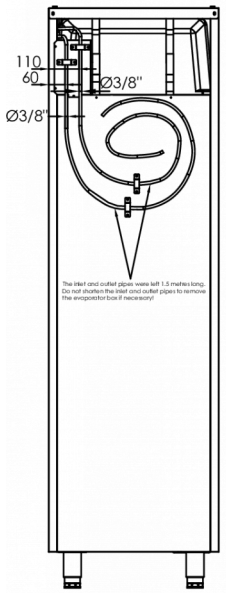

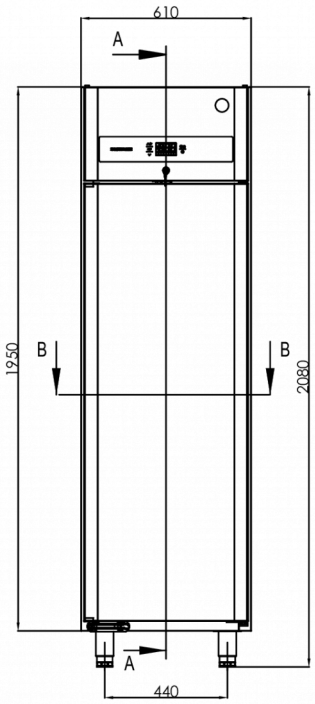

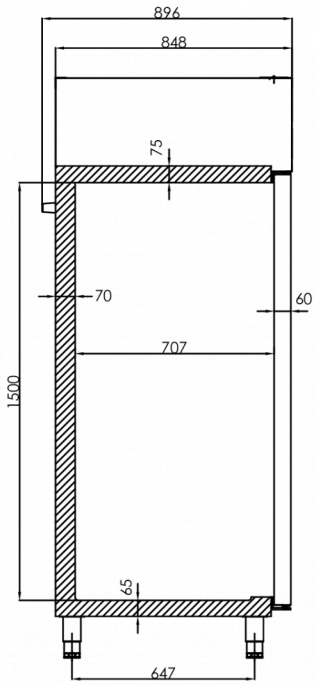

A-A

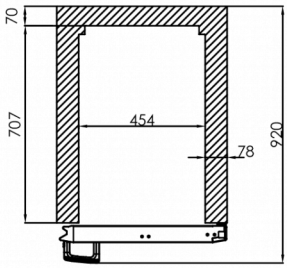

B-B

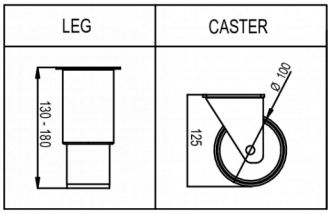

HOSHIZAKI

Hoshizaki Belgium info@hoshizaki.nl
Hoshizaki Danmark info@hoshizaki.dk
Hoshizaki Deutschland vertrieb@hoshizaki.de
Hoshizaki France info@hoshizaki.fr
Hoshizaki Iberia info@hoshizaki.es
Hoshizaki Italia commerciale@hoshizaki.it
Hoshizaki Middle East sales.ex@hoshizaki-europe.com

Hoshizaki Netherlands info@hoshizaki.nl
Hoshizaki Norge salg@hoshizaki.no
Hoshizaki Sverige orderSE@hoshizaki.dk
Hoshizaki UK uksales@hoshizaki.uk
Países exportadores sales.ex@hoshizaki-europe.com
Otros paises sales.ex@hoshizaki-europe.com

www.hoshizaki.es